# Mandrel - Race Hardened

R302755M

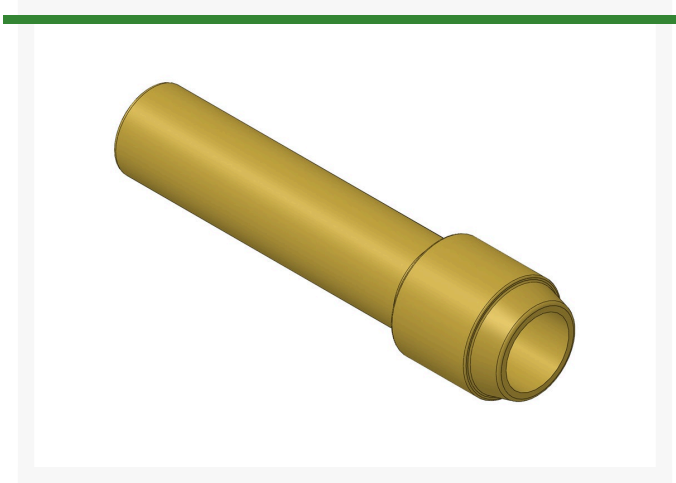

**Specifications**

| | |
|---|---|
| Manufacturer | R&R Products |

**R&R Products Inc**
3334 E Milber St Tucson, 85714
800-528-3446
**https://www.rrproducts.com/**