Carson T-Cover Lid Only - 2436 Gray Blank

RGC24364087

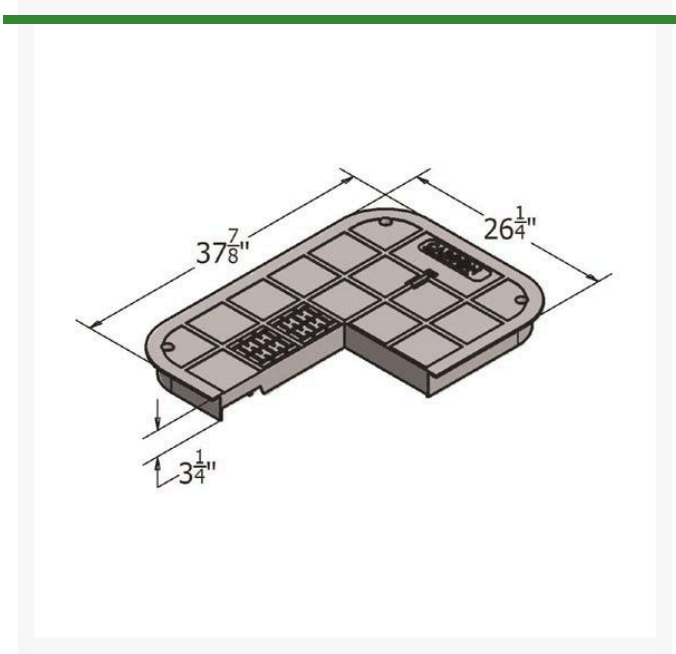

Specifications

Manufacturer	Carson

R&R Products Inc
3334 E Milber St Tucson, 85714
800-528-3446
https://www.rrproducts.com/