Complete Standard Cutting Unit

R067848

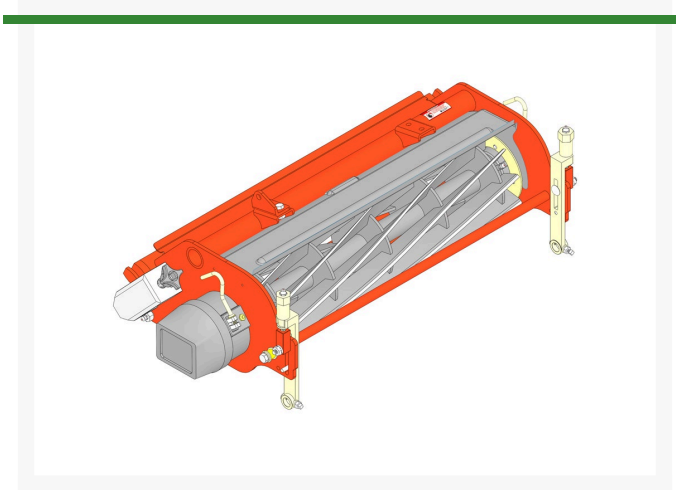

Specifications

Manufacturer	R&R Products

R&R Products Inc
3334 E Milber St Tucson, 85714
800-528-3446
https://www.rrproducts.com/